REV	LOCATIONS	DESCRIPTION	DATE	REVISER	APPD
1	△1	Size changes	18/JUN/21	KATE	CHERRY

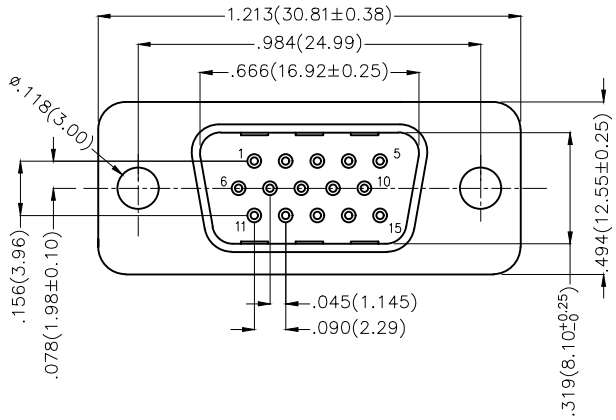

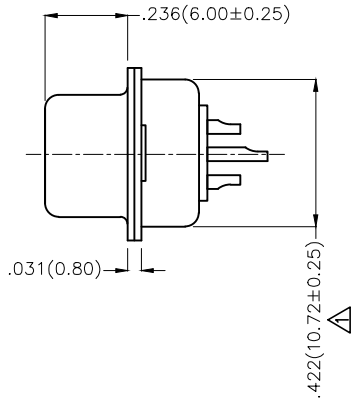

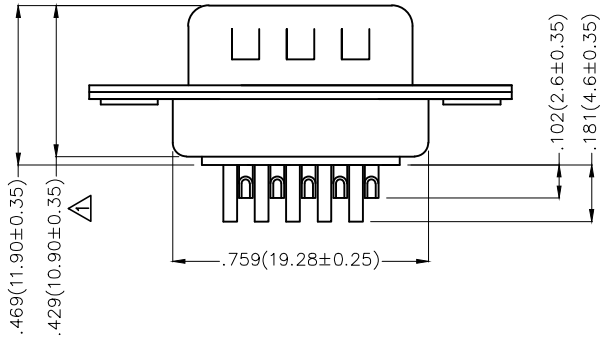

Ordering Information

FDM	15	11	—	M0	W	S	1	XX	XX	X
1	2	3		4	5	6	7	8	9	10

1	Category	2	Circuits	3	Distinction No.	4	Type	5	Assembly Layout
	FDM–Machined pin D–SUB connector		15		11		M0–Male		W–Welding Type

6	Entry Angle	7	Plating	8	Thickness of Plating	9	Color–Resin	10	Packaging
	S–180° Vertical		1–Gold Plated		01–1μ" 03–03μ" Custom plate available		W1–White K6–Black		K–Tray L–Tube

Materials And Finish
Shell: Steel Material,Front Nickel Plated
Back Shell Tin Plated
Insulator: PBT Thermoplastic,UL 94V–0 ,Color: Black
Contact Material: Brass /Gold Plated
Electrical Characteristic
Contact Current Rating: 5.0A
Contact Resistance : 30 Milliohms Max
Dielectric Withstanding Voltage : 500V AC r.m.s Min
Insulation Resistance: 5000 Megaohms Min.
Temperature Range–Operating: –55°C ~ +105°C

THIRD ANGLE PROJECTION	GENERAL TOLERANCES (UNLESS SPECIFIED)		APPROVE BY	DATE	PART NO.	ITEM NO.	TXGA Leader Of Industry
			FRANK	23/JUL/13	FDM1511–M0WS1XXXXX	FDM1511–M0	
DESIGN UNITS Inch (metric)	X.±.012(0.30)	X.°±5°	CHECKED BY	DATE	TITLE		
	X.X±.008(0.20)	.X°±2°	CHERRY	23/JUL/13	Machined pin D–SUB connector 180° Vertical Male		
	X.XX±.006(0.15)	.XX°±1°	DRAWN BY	DATE		REV 1	SHEET NO. 1/1
SCALE 5:1 / SIZE A4	X.XXX±.004(0.10)	.XXX°±0.5°	JACOB	23/JUL/13			

THIS DRAWING CONTAINS INFORMATION THAT IS PROPRIETARY TO TXGA INDUSTRIAL ELECTRONICS(S.Z)CO.,LTD AND SHOULD NOT BE USED WITHOUT WRITTEN PERMISSION