REV	LOCATIONS	DESCRIPTION	DATE	REVISER	APPD

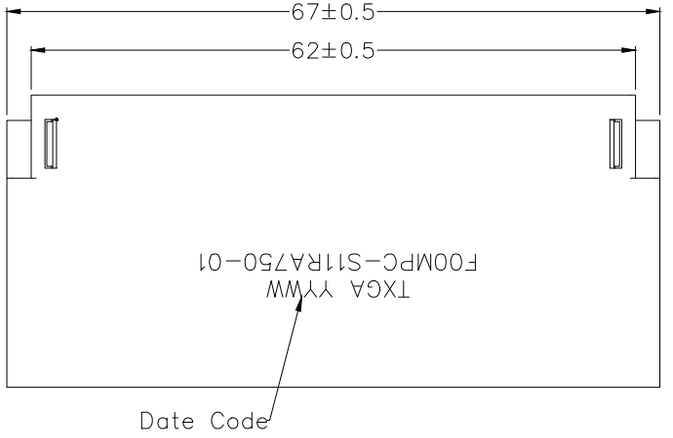

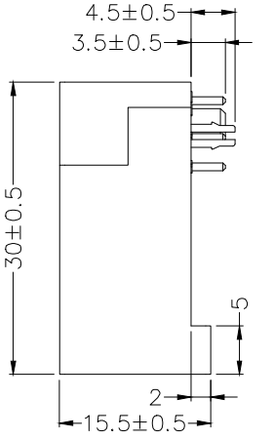

SPECIFICATIONS

Electrical
- Current Rating: 75A(ø5 Power ends), 50A(ø3.58 Power ends) 3A(Signal ends)
- Voltage Rating: 600V AC/DC(Power ends), 80V AC/DC(Signal ends)
- Contact Resistance: 0.7mΩ Max.(ø5 Power ends), 0.75mΩ Max.(ø3.58 Power ends) 12mΩ Max.(Signal ends)
- Insulation Resistance: 1000 MΩ Min.
- Withstanding Voltage: 1500V AC(Power ends), 500V AC(Signal ends)
- Temperature Range—Operating: −55°C~+125°C

Mechanical
- Durability: 500 Cycles

Material and Plating
- Housing: PBT (UL 94V−0) ,Black
- Board Lock: Phosphor Bronze/ Tin plated
- Contact Terminal:
  - (Power ends)Brass / 1.5 μm Silver Plated
  - (Signal ends)Brass / 0.08 μm Gold Plated

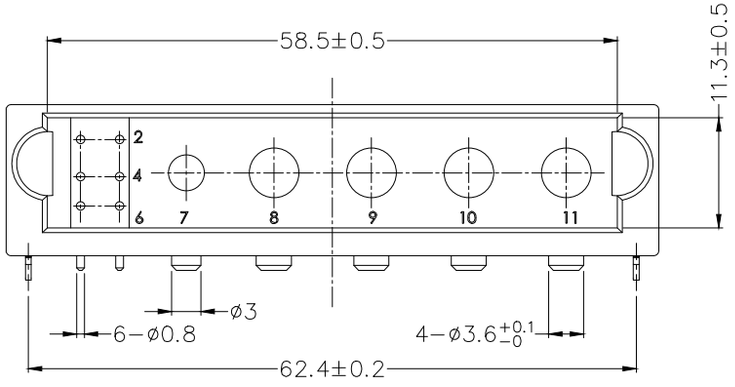

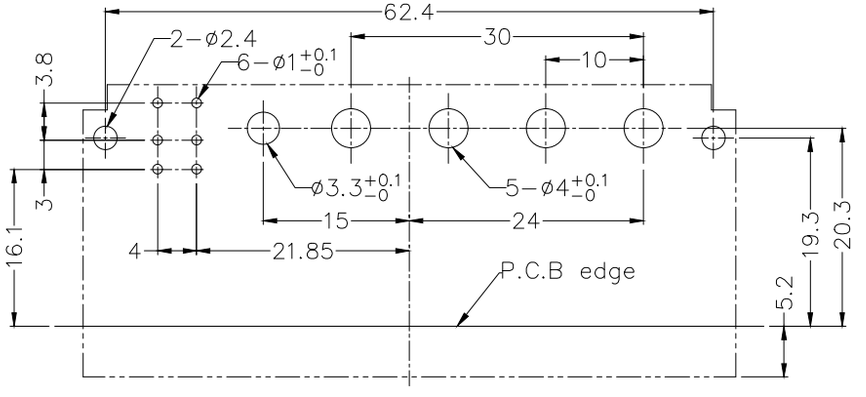

Recommended P.C.Board Layout

THIRD ANGLE PROJECTION	GENERAL TOLERANCES (UNLESS SPECIFIED)		APPROVE BY LEO	DATE 04/JUN/23	PART NO. F00MPC-S11RA750-01	ITEM NO. F00MPC	TXGA Building Technology Cornerstone
DESIGN UNITS mm	X. ±0.30	X.° ±5°	CHECKED BY GISELLE	DATE 04/JUN/23	TITLE Power Module Connector 4+1+6Circuits Socket 75A/50A/3A		
	X.X ±0.20	X.X° ±2°				REV 0	SHEET NO. 1/1
SCALE 5:1	X.XX ±0.15	X.XX° ±1°	DRAWN BY PYD	DATE 04/JUN/23	THIS DRAWING CONTAINS INFORMATION THAT IS PROPRIETARY TO TXGA INDUSTRIAL ELECTRONICS(S.Z)CO.,LTD AND SHOULD NOT BE USED WITHOUT WRITTEN PERMISSION		
SIZE A4	X.XXX ±0.10	X.XXX° ±0.5°					