REV	LOCATIONS	DESCRIPTION	DATE	REVISER	APPD
1	⚠	Packing&Size Change	2022.02.18	CHERRY	KATE

Electrical
- Material: Phosphor Bronze
- Plating: Tin–Plated
- Wire Range: 22AWG~16AWG ⚠
- Applicable Housing: FHG42001Series
- Minimum Order Quantity : 6,000 PCS ⚠

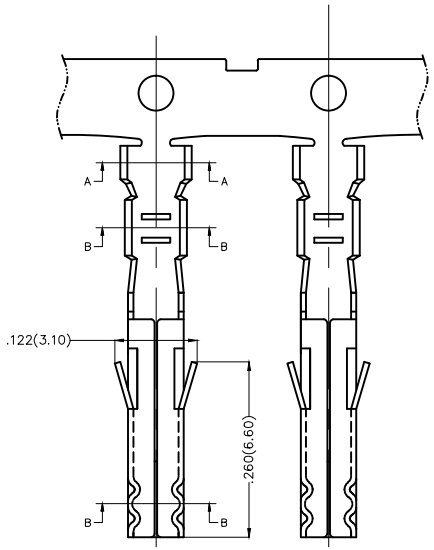

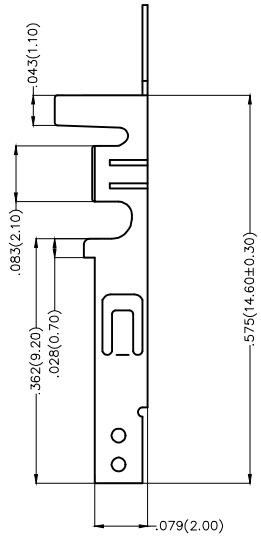

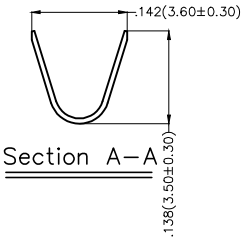

Section A–A

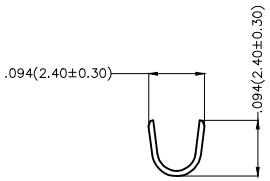

Section B–B

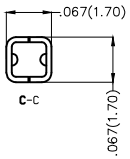

THIRD ANGLE PROJECTION	GENERAL TOLERANCES (UNLESS SPECIFIED)		APPROVE BY FRANK	DATE 25/JUN/13	PART NO. FT42001–F2H	ITEM NO. FT42001	TXGA Leader Of Industry
DESIGN UNITS Inch (metric)	X.±.012(0.30)	X.°±5°	CHECKED BY JACOB	DATE 25/JUN/13	TITLE Wire to Board Pitch 4.2mm(Terminal)		
	X.X±.008(0.20)	.X°±2°				REV 0	SHEET NO. 1/2
SCALE 5:1 / SIZE A4	X.XX±.006(0.15)	.XX°±1°	DRAWN BY CHERRY	DATE 25/JUN/13	THIS DRAWING CONTAINS INFORMATION THAT IS PROPRIETARY TO TXGA INDUSTRIAL ELECTRONICS(S.Z)CO.,LTD AND SHOULD NOT BE USED WITHOUT WRITTEN PERMISSION		
	X.XXX±.004(0.10)	.XXX°±0.5°					

REV	LOCATIONS	DESCRIPTION	DATE	REVISER	APPD

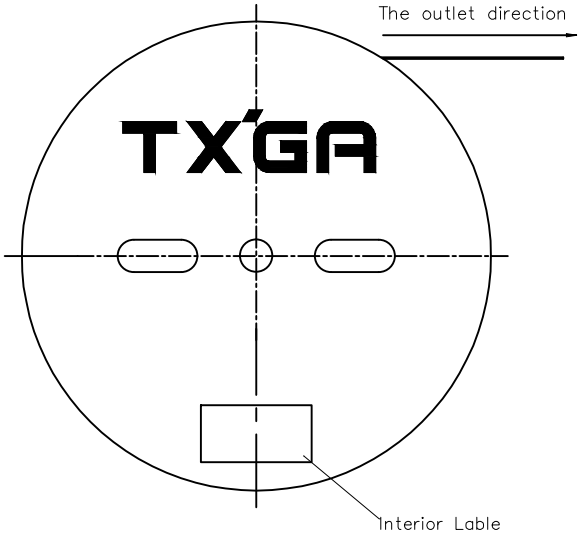

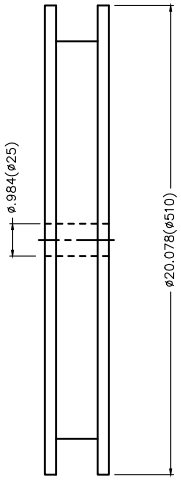

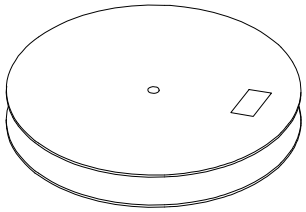

6,000Pcs/Reel

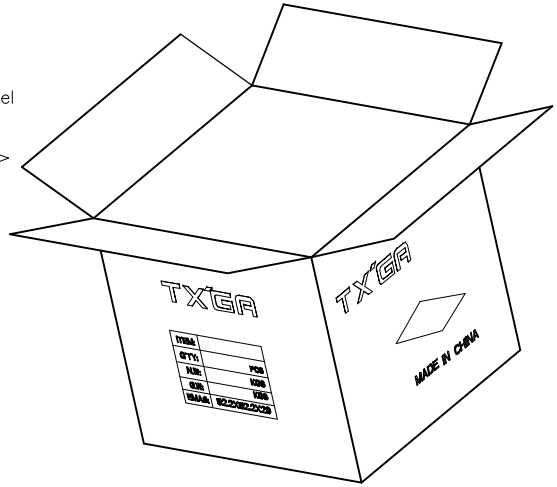

THIRD ANGLE PROJECTION	GENERAL TOLERANCES (UNLESS SPECIFIED)		APPROVE BY FRANK	DATE 25/JUN/13	PART NO. FT42001-F2H	ITEM NO. FT42001	TXGA Leader Of Industry
DESIGN UNITS Inch (metric)	X.±.012(0.30)	X.°±5°	CHECKED BY JACOB	DATE 25/JUN/13	TITLE Wire to Board Pitch 4.2mm(Terminal)		
	X.X±.008(0.20)	.X°±2°					REV 0 / SHEET NO. 2/2
SCALE 5:1 / SIZE A4	X.XX±.006(0.15)	.XX°±1°	DRAWN BY CHERRY	DATE 25/JUN/13			
	X.XXX±.004(0.10)	.XXX°±0.5°					

THIS DRAWING CONTAINS INFORMATION THAT IS PROPRIETARY TO TXGA INDUSTRIAL ELECTRONICS(S.Z)CO.,LTD AND SHOULD NOT BE USED WITHOUT WRITTEN PERMISSION

REV	LOCATIONS	DESCRIPTION	DATE	REVISER	APPD

Electrical
Material: Phosphor Bronze
Plating: Tin-Plated
Wire Range: 24AWG~20AWG
Applicable Housing: FHG42001Series
Minimum Order Quantity : 6,500 PCS

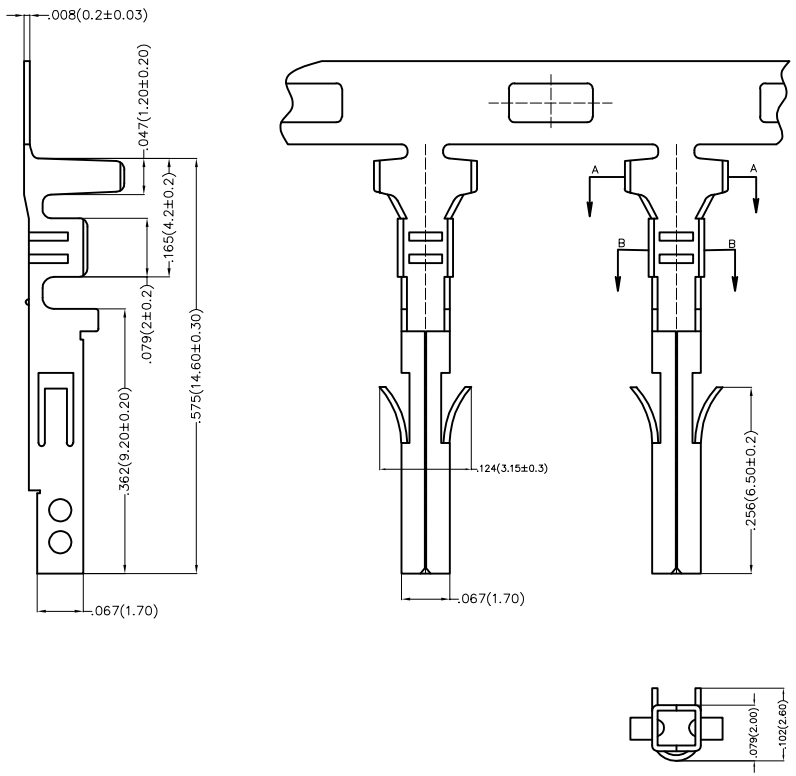

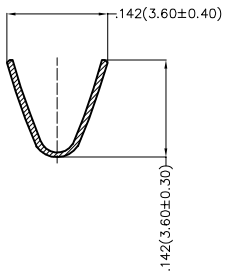

Section A–A

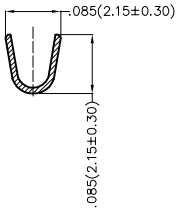

Section B–B

THIRD ANGLE PROJECTION	GENERAL TOLERANCES (UNLESS SPECIFIED)		APPROVE BY FRANK	DATE 25/JUN/13	PART NO. FT42001-F2H0	ITEM NO. FT42001	TXGA Leader Of Industry
DESIGN UNITS Inch (metric)	X.±.012(0.30)	X.°±5°	CHECKED BY JACOB	DATE 25/JUN/13	TITLE Wire to Board Pitch 4.2mm(Terminal)		
	X.X±.008(0.20)	.X°±2°				REV 0	SHEET NO. 1/2
SCALE 5:1 / SIZE A4	X.XX±.006(0.15)	.XX°±1°	DRAWN BY MATT	DATE 25/JUN/13	THIS DRAWING CONTAINS INFORMATION THAT IS PROPRIETARY TO TXGA INDUSTRIAL ELECTRONICS(S.Z)CO.,LTD AND SHOULD NOT BE USED WITHOUT WRITTEN PERMISSION		
	X.XXX±.004(0.10)	.XXX°±0.5°					

REV	LOCATIONS	DESCRIPTION	DATE	REVISER	APPD

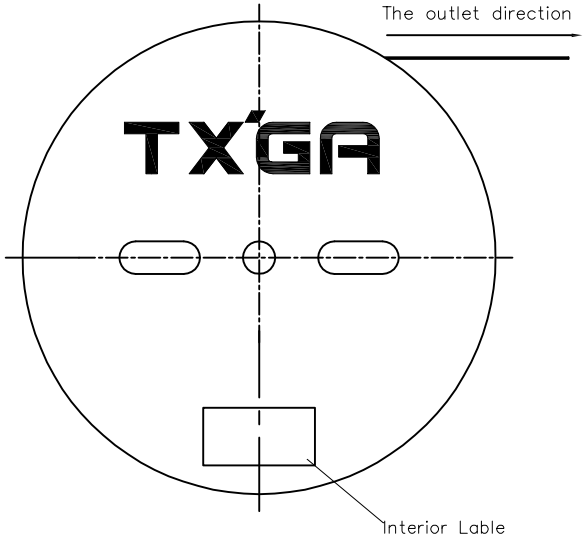

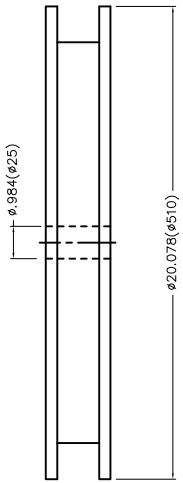

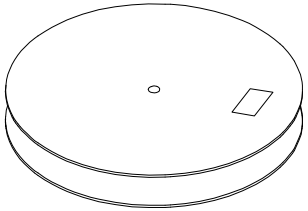

6,500Pcs/Reel

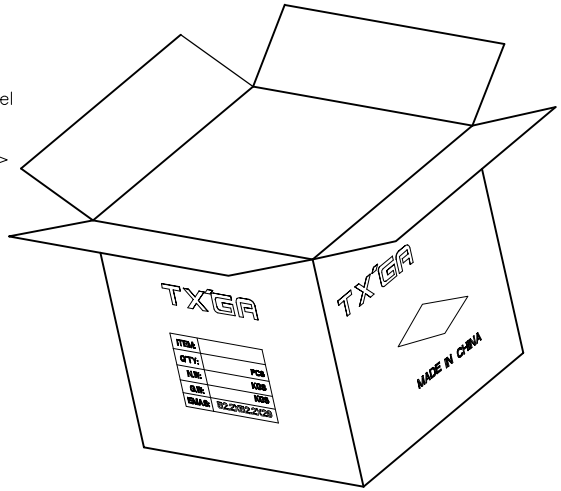

THIRD ANGLE PROJECTION	GENERAL TOLERANCES (UNLESS SPECIFIED)		APPROVE BY FRANK	DATE 25/JUN/13	PART NO. FT42001-F2H0	ITEM NO. FT42001	TXGA Leader Of Industry
DESIGN UNITS Inch (metric)	X.±.012(0.30)	X.°±5°	CHECKED BY JACOB	DATE 25/JUN/13	TITLE Wire to Board Pitch 4.2mm(Terminal)		
	X.X±.008(0.20)	.X°±2°					REV 0 / SHEET NO. 2/2
SCALE 5:1 / SIZE A4	X.XX±.006(0.15)	.XX°±1°	DRAWN BY MATT	DATE 25/JUN/13	THIS DRAWING CONTAINS INFORMATION THAT IS PROPRIETARY TO TXGA INDUSTRIAL ELECTRONICS(S.Z)CO.,LTD AND SHOULD NOT BE USED WITHOUT WRITTEN PERMISSION		
	X.XXX±.004(0.10)	.XXX°±0.5°					