Coded	3PIN	4PIN
A-Coded	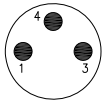	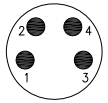

REV	LOCATIONS	DESCRIPTION	DATE	REVISER	APPD
0		New Relase	8/May		FRANK

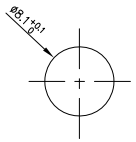

Recommended Panel Cut-Out

Note:
1. ⊛ Important Dimension
2. Waterproof Rate: IP68【in mated condition】
3. This product must meet IEC61076-2-104
4. This product must meet 2011/65/EU ROHS compliance.
5. Not note tolerances: ±0.20
6. 200PCS/Bag

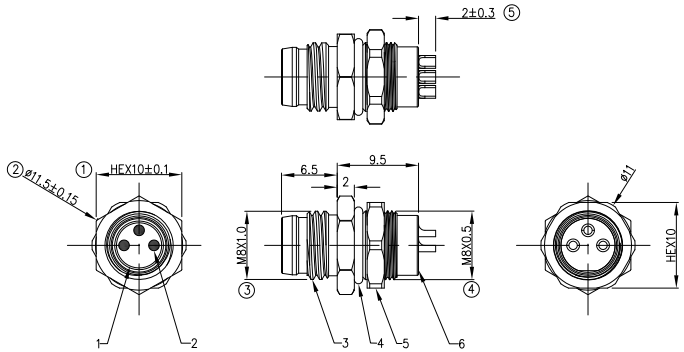

Connector locking system	M8X1.0
Wiring type	Solder
Degree of protection	IP68(in mated condition)
Mechanical operation	> 100 mating cycles
Upper temperature	105℃
Lower temperature	-40℃
Pollution degree	3
Overvoltage categorie	II
Material group	II
Material of contact	CuZn (Messing/brass)
Contact plating	Au
Material of contact body	PA
Sealing	NBR
Material of housing	Brass nickel plated

Pin Assignments Front View	Rated Voltage	Rated impulse Voltage	Rated Currnt(40℃)	Contact resistance	Insulation resistance	Wire Size(mm^2) /AWG
	60V	800V	4A	≤5mΩ	≥100MΩ	0.25/24
	60V	800V	4A	≤5mΩ	≥100MΩ	0.25/24

Ordering Information

F005M8 – S X XX P S W 0 – 01
(1 F005M8 – 2 S 3 4 5 6 7 8 – 8)

1. Series Name: F005M8-FM8
2. Category: S-Socket
3. Coded: A-CODED
4. Circuits: 03-3Circuits; 04-4Circuits
5. Contact Gender: P-Pin
6. Entry Angle: S-180° Vertical
7. Wiring type: W-Soldering
8. reserve: 0
9. SN: 01

* Note: All Materials Meet The "RoHs" !

NO.	SPECIFICATION	DESCRIPTION	NOTE	Q'TY
6	Epoxy resin			
5	Nut	Plating Ni	Brass	1PC
4	O-ring	NBR	Black	1PC
3	Shell	Plating Ni	Brass	1PC
2	Male terminal	Plating 4U" Au	Brass	3PCS
1	Housing	A-Code male	PA66+15%GF	1PC

THIRD ANGLE PROJECTION

DESIGN UNITS: Metric

SCALE: 2:1 | SIZE: A4

GENERAL TOLERANCES (UNLESS SPECIFIED)	
X.±.012(0.30)	X.°±5°
X.X±.008(0.20)	.X°±2°
X.XX±.006(0.15)	.XX°±1°
X.XXX±.004(0.10)	.XXX°±0.5°

APPROVE BY	FRANK	DATE 8/May/23
CHECKED BY	CHERRY	DATE 8/May/23
DRAWN BY	DANIEL	DATE 8/May/23

PART NO. F005M8-SXXXPSW0-01

ITEM NO. F005M8

TITLE: M8X1.0 A-Coded 3PIN Male Rear Fastened M8X0.5

TXGA Building Technology Cornerstone

REV 0 | SHEET NO. 1/1

THIS DRAWING CONTAINS INFORMATION THAT IS PROPRIETARY TO TXGA INDUSTRIAL ELECTRONICS(S.Z)CO.,LTD AND SHOULD NOT BE USED WITHOUT WRITTEN PERMISSION