Pin No. / Coded	2PIN	3PIN	4PIN	5PIN	6PIN	7PIN	8PIN
A-Coded							
B-Coded							

REV	LOCATIONS	DESCRIPTION	DATE	REVISER	APPD
0		New Relase	6/June		FRANK

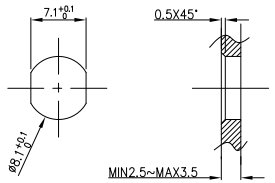

Recommended Panel Cut-Out

Note:
1. QC Important Dimension
2. Waterproof Rate: IP68
3. This product must meet IEC61076-2-104
4. This product must meet 2011/65/EU ROHS compliance.
5. Not note tolerances: ±0.20

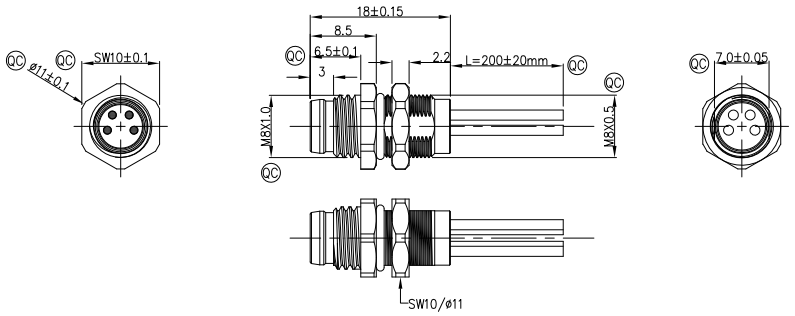

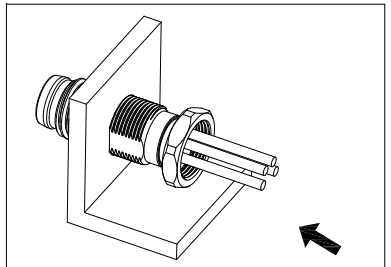

Mounting type: Rear Fastened

WIRING CHART

2pin	3pin	4pin	5pin	6pin	7pin	8pin
1 brown 3 blue	1 brown 3 blue 4 black	1 brown 2 white 3 blue 4 black	1 brown 2 white 3 bluw 4 black 5 grey	1 brown 2 white 3 blue 4 black 5 grey 6 purple	1 white 2 brown 3 green 4 yellow 5 grey 6 pink 7 blue	1 white 2 brown 3 green 4 yellow 5 grey 6 pink 7 blue 8 red

Pin Assignments Front View	Rated Voltage	Rated impulse Voltage	Rated Currnt(40°C)	Contact resistance	Insulation resistance	Wire Size(mm^2)/ AWG
	60V	1500V	4A	≤8mΩ	≥100MΩ	0.32/22
	60V	1500V	4A	≤8mΩ	≥100MΩ	0.32/22
	60V	1500V	4A	≤8mΩ	≥100MΩ	0.32/22
	60V	800V	4A	≤8mΩ	≥100MΩ	0.32/22
	30V	800V	1.5A	≤8mΩ	≥100MΩ	0.22/24
	30V	800V	1.5A	≤8mΩ	≥100MΩ	0.14/26
	30V	800V	1.5A	≤8mΩ	≥100MΩ	0.14/26

Connector locking system	Screw
Wiring type	Crimp
Degree of protection	IP68(in mated condition)
Mechanical operation	> 100 mating cycles
Upper temperature	105°C
Lower temperature	−40°C
Pollution degree	3
Overvoltage categorie	II
Material group	II
Material of contact	CuZn (Messing/brass)
Contact plating	Au
Material of contact body	PA
Sealing	NBR
Material of housing	Brass nickel plated

Ordering Information

F005M8 – S X XX S S P XXX – 00
(1 – 2 3 4 5 6 7 8 – 9)

1. Series Name: F005M8–FM8
2. Category: S–Socket
3. Coded: A–A CODED; B–B CODED
4. Circuits: 02–2Circuits; 03–3Circuits; 04–4Circuits; 05–5Circuits; 06–6Circuits; 07–7Circuits; 08–8Circuits
5. Contact: S–Socket
6. Entry Angle: S–180° Vertical
7. Wiring type: P–Crimp
8. Length: XXX(See Table1)
9. SN: 00

TABLE 1

CABLE LENGTH (XXX)	050	100	150	200	250	300	350	400	450	.....	950
L(M)	50mm	100mm	150mm	200mm	250mm	300mm	350mm	400mm	450mm	.....	950mm

THIRD ANGLE PROJECTION

DESIGN UNITS: Inch (metric)

SCALE: 2:1 | SIZE: A4

GENERAL TOLERANCES (UNLESS SPECIFIED)

X.±.012(0.30)	X.°±5°
X.X±.008(0.20)	.X°±2°
X.XX±.006(0.15)	.XX°±1°
X.XXX±.004(0.10)	.XXX°±0.5°

APPROVE BY	FRANK	DATE 10/June/23
CHECKED BY	CHERRY	DATE 10/June/23
DRAWN BY	DANIEL	DATE 10/June/23

PART NO. F005M8–SXXXSSPXXX–00

ITEM NO. F005M8

TITLE: M8X1.0 Rear fastened M8X0.5 male socket with lize,free end

TXGA Building Technology Cornerstone

REV 0 | SHEET NO. 1/1

THIS DRAWING CONTAINS INFORMATION THAT IS PROPRIETARY TO TXGA INDUSTRIAL ELECTRONICS(S.Z)CO.,LTD AND SHOULD NOT BE USED WITHOUT WRITTEN PERMISSION