REV	LOCATIONS	DESCRIPTION	DATE	REVISER	APPD

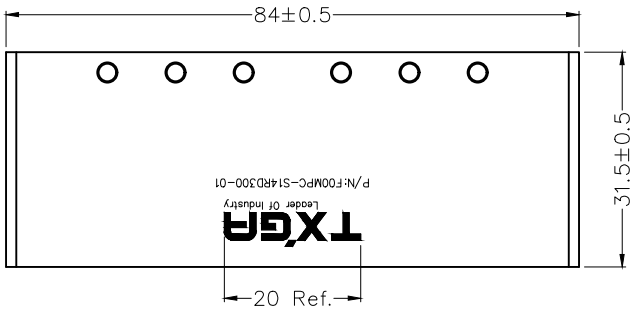

SPECIFICATIONS

Electrical
- Current Rating: 75A(Power ends), 3A(Signal ends)
- Voltage Rating: 1000V AC(Power ends), 48V DC(Signal ends)
- Contact Resistance: 1mΩ Max.(Power ends), 12mΩ Max.(Signal ends)
- Insulation Resistance: 3000 MΩ Min.
- Withstanding Voltage: 3000V AC(Power ends), 1000V AC(Signal ends)
- Temperature Range–Operating: −55°C~+125°C

Mechanical
- Durability: 500 Cycles

Material and Plating
- Housing: PBT (UL 94V–0) ,Black
- Terminal:
  - Power end: Copper Alloy / 3~4μm Silver plated
  - Signal end: Copper Alloy / 0.1μm Gold plated
- Board Lock: Phosphor Bronze/ Nickel plated

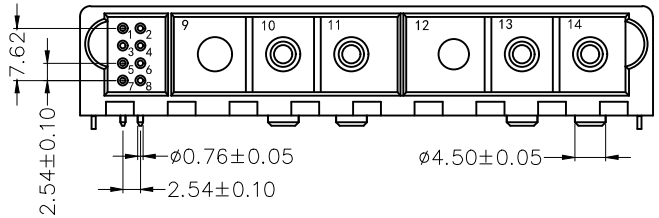

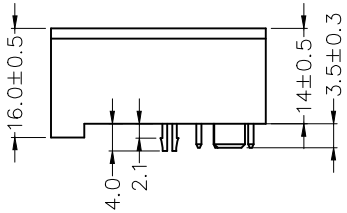

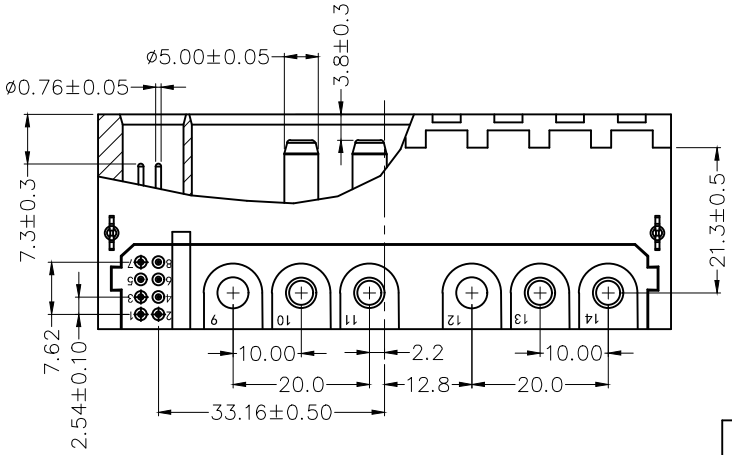

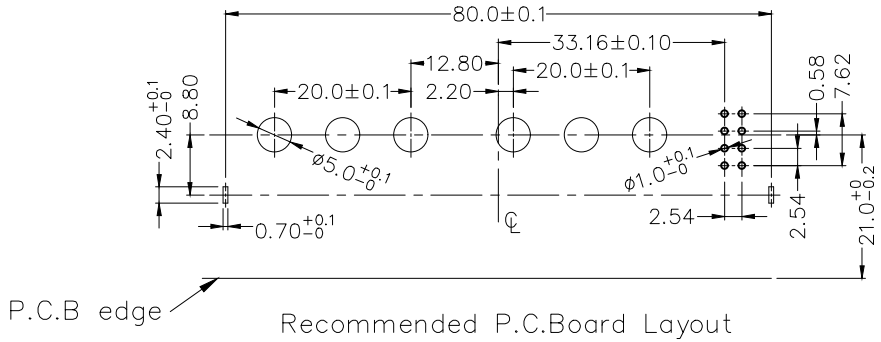

Recommended P.C.Board Layout

General tolerances: ±0.05

THIRD ANGLE PROJECTION	GENERAL TOLERANCES (UNLESS SPECIFIED)		APPROVE BY FRANK	DATE 20/AUG/21	PART NO. F00MPC–S14RD300–01	ITEM NO. F00MPC	TXGA Leader Of Industry
DESIGN UNITS Metric	X. ±0.30	X.° ±5°	CHECKED BY CHERRY	DATE 20/AUG/21	TITLE Charging Pile Module Power Connector DC 30A 14Circuits Socket	REV 0	SHEET NO. 1/1
	X.X ±0.20	X.X° ±2°					
	X.XX ±0.15	X.XX° ±1°	DRAWN BY MATT	DATE 20/AUG/21	THIS DRAWING CONTAINS INFORMATION THAT IS PROPRIETARY TO TXGA INDUSTRIAL ELECTRONICS(S.Z)CO.,LTD AND SHOULD NOT BE USED WITHOUT WRITTEN PERMISSION		
SCALE 1:1	X.XXX ±0.10	X.XXX° ±0.5°					
SIZE A4							