| REV | LOCATIONS | DESCRIPTION | DATE | REVISER | APPD |
|---|---|---|---|---|---|
| | | | | | |

SPECIFICATIONS

Electrical
- Current rating: 80 A Max.
- Contact resistance: 110 μΩ Max.

Material
- Contact: Copper alloy
- Crown lamella: BeCu

Plating
- Contact: 3 μm of silver over 1 μm of nickel
- Crown lamella: 3 μm of silver over 1 μm of nickel

Mechanical
- Durability: 500 cycles
- Wire range: 10 mm²
- Applicable pin: ø8.0 mm
- Maximum mounting depth of pin: 19.3 mm

* All materials meet the "RoHs"

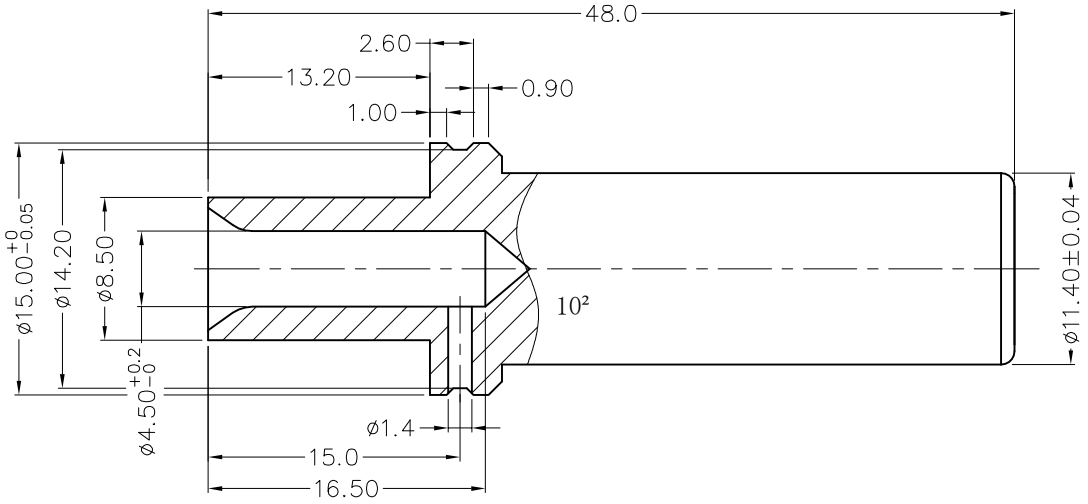


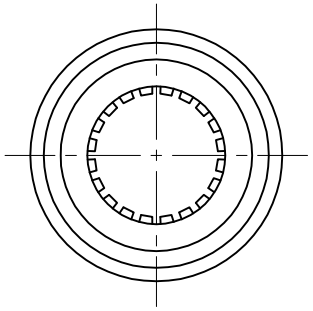

| | | | | | | | |
|---|---|---|---|---|---|---|---|
| THIRD ANGLE PROJECTION | GENERAL TOLERANCES (UNLESS SPECIFIED) | | APPROVE BY FRANK | DATE 12/MAY/22 | PART NO. F0CLCT-08004120-04 | ITEM NO. F0CLCT | TXGA Leader Of Industry |
| DESIGN UNITS Metric | X.±0.30 | X.°±5° | CHECKED BY CHERRY | DATE 12/MAY/22 | TITLE CROWN LAMELLA SOCKET | | REV 0 / SHEET NO. 1/1 |
| SCALE 1:1 / SIZE A4 | X.X±0.20 | .X°±2° | | | | | |
| | X.XX±0.10 | .XX°±1° | DRAWN BY MATT | DATE 12/MAY/22 | THIS DRAWING CONTAINS INFORMATION THAT IS PROPRIETARY TO TXGA INDUSTRIAL ELECTRONICS(S.Z)CO.,LTD AND SHOULD NOT BE USED WITHOUT WRITTEN PERMISSION | | |
| | X.XXX±0.05 | .XXX°±0.5° | | | | | |