REV	LOCATIONS	DESCRIPTION	DATE	REVISER	APPD

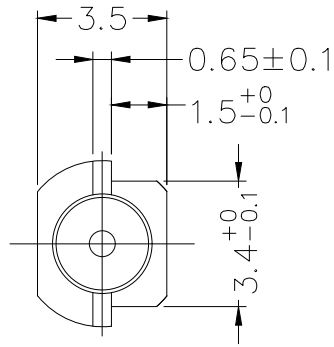

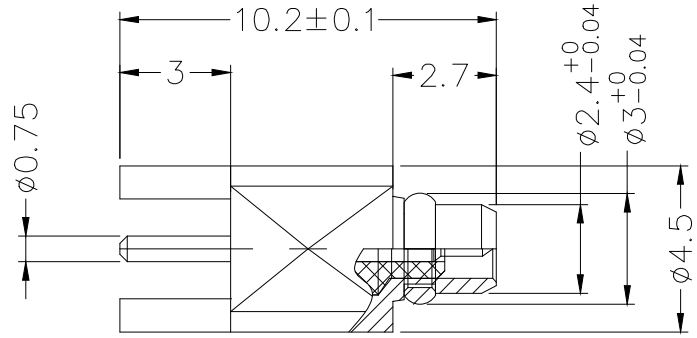

SPECIFICATION

Technical Parameters
- Temperature range: −40~+125℃;
- Characteristic impedance: 50Ω;
- Ferquency range: DC~6GHz;
- Voltage Rating: 170V rms;
- Dielectric withstanding voltage: 750V rms;
- Insulation resistance: ≥1000MΩ;
- VSWR: ≤1.25(DC~6GHz)
- Inner Conductor Contact Resistance: 5mΩ MAX;
- Outer Conductor Contact Resistance: 2.5mΩ MAX;

Mechanical
- Durability: 500 cycles

Material and Plating
- Insulators: PTFE(UL 94V−0), White
- Contact: Brass, 1μ" Gold plated
- Body: Brass, 1μ" Gold plated
- Snap Ring: Phosphor Bronze, 1μ" Gold plated

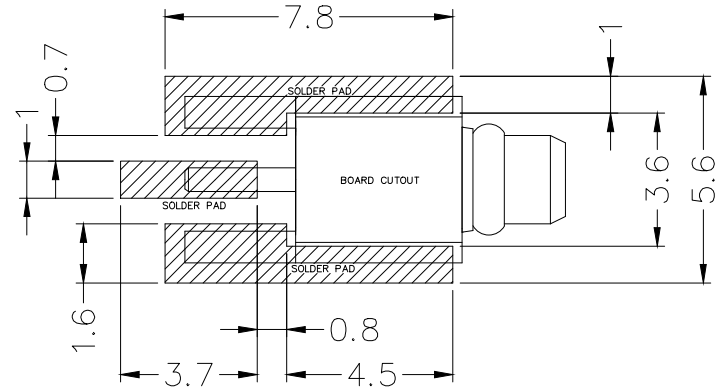

Recommended P.C.Board Layout

THIRD ANGLE PROJECTION	GENERAL TOLERANCES (UNLESS SPECIFIED)		APPROVE BY LEO	DATE 04/JAN/22	PART NO. FOMMCX−P50P0BHS−01 / ITEM NO. FOMMCX
	X. ±0.30	X.° ±5°	CHECKED BY GISELLE	DATE 04/JAN/22	TITLE MMCX Plug 90° Angle Cutout Mount
DESIGN UNITS mm	X.X ±0.20	X.X° ±2°			
	X.XX ±0.15	X.XX° ±1°	DRAWN BY PYD	DATE 04/JAN/22	
SCALE 5:1 / SIZE A4	X.XXX ±0.10	X.XXX° ±0.5°			

TXGA Building Technology Cornerstone

REV 0 | SHEET NO. 1/1

THIS DRAWING CONTAINS INFORMATION THAT IS PROPRIETARY TO TXGA INDUSTRIAL ELECTRONICS(S.Z)CO.,LTD AND SHOULD NOT BE USED WITHOUT WRITTEN PERMISSION