REV	LOCATIONS	DESCRIPTION	DATE	REVISER	APPD

SPECIFICATIONS

Electrical
- Current Rating: 5A
- Contact Resistance: 5 mΩ Max.
- Temperature Range–Operating: −55℃ ~ +125℃

Mechanical
- Durability: 500 Cycles
- Wire Range: 20AWG

Material and Plating
- Terminal: Brass/0.08 μm Gold Plated

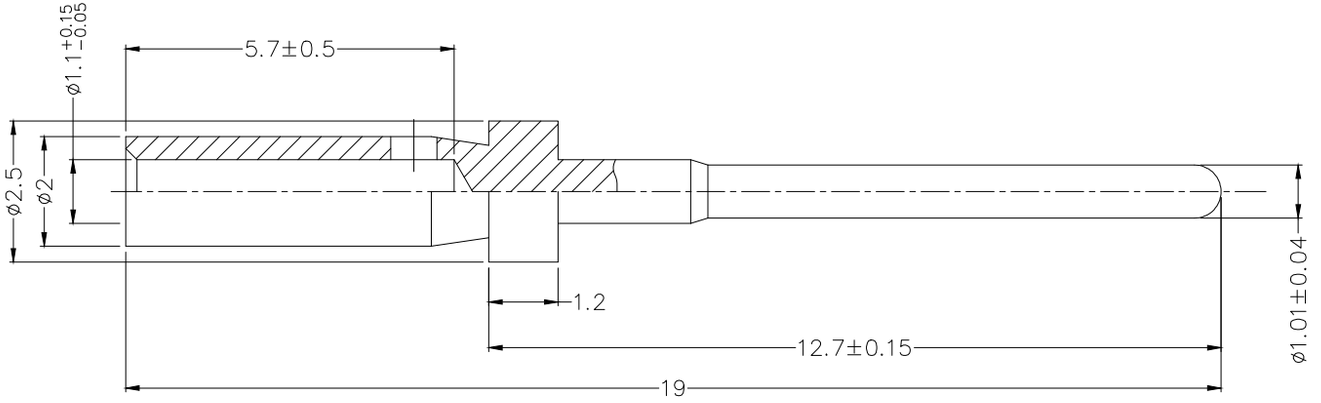

THIRD ANGLE PROJECTION	GENERAL TOLERANCES (UNLESS SPECIFIED)		APPROVE BY	DATE	PART NO.	ITEM NO.	TXGA Building Technology Cornerstone
			LEO	04/JUN/23	F0P0CT-01011330-01	F0P0CT	
DESIGN UNITS mm	X. ±0.30	X.° ±5°	CHECKED BY	DATE	TITLE		
	X.X ±0.20	X.X° ±2°	GISELLE	04/JUN/23	Charging Pile Module Power Connector, Male Terminal, 5A		
SCALE 5:1	X.XX ±0.15	X.XX° ±1°	DRAWN BY	DATE	REV 0	SHEET NO. 1/1	
SIZE A4	X.XXX ±0.10	X.XXX° ±0.5°	PYD	04/JUN/23	THIS DRAWING CONTAINS INFORMATION THAT IS PROPRIETARY TO TXGA INDUSTRIAL ELECTRONICS(S.Z)CO.,LTD AND SHOULD NOT BE USED WITHOUT WRITTEN PERMISSION		