REV	LOCATIONS	DESCRIPTION	DATE	REVISER	APPD

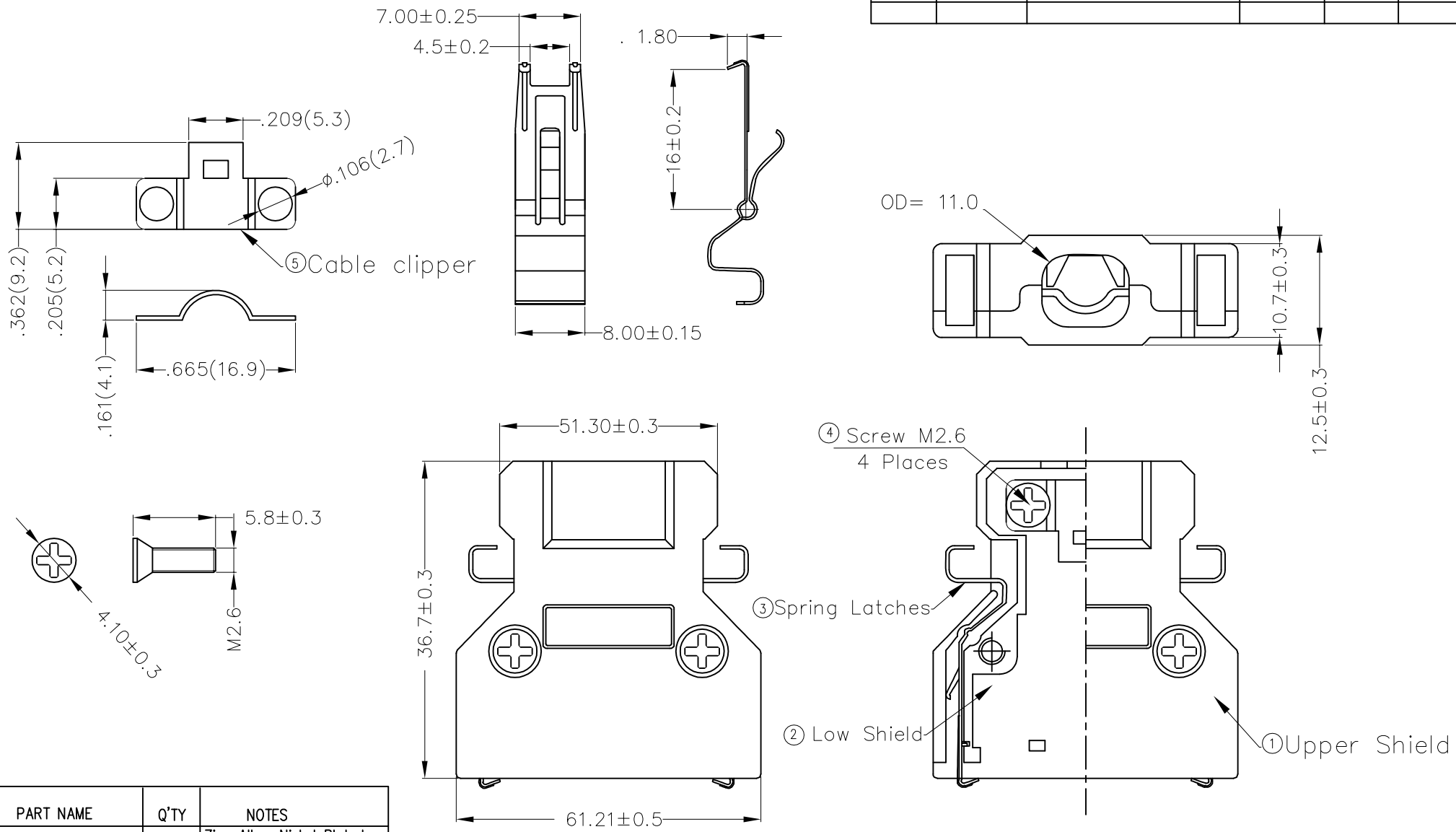

ITEM	PART NAME	Q'TY	NOTES
1	Upper shield	1	Zinc Alloy ,Nickel Plated Over Copper
2	Low shield	1	Zinc Alloy ,Nickel Plated Over Copper
3	Spring latches	2	Stainless Steel
4	Screw M2.6	4	Steel ,Nickel Plated Over Copper
5	Cable clipper	2	Steel ,Nickel Plated Over Copper

THIRD ANGLE PROJECTION

DESIGN UNITS Inch (metric)

SCALE 5:1 SIZE A4

GENERAL TOLERANCES (UNLESS SPECIFIED)

X.±.012(0.30)	X.°±5°
X.X±.008(0.20)	.X°±2°
X.XX±.006(0.15)	.XX°±1°
X.XXX±.004(0.10)	.XXX°±0.5°

APPROVE BY	FRANK	DATE	18/JUN/13
CHECKED BY	CHERRY	DATE	18/JUN/13
DRAWN BY	KATE	DATE	18/JUN/13

PART NO. FCS6808-C100BA

ITEM NO. FCS6808

TITLE SCSI Connector 68 circuits Cover

TXGA Leader Of Industry

REV 0 SHEET NO. 1/1

THIS DRAWING CONTAINS INFORMATION THAT IS PROPRIETARY TO TXGA INDUSTRIAL ELECTRONICS(S.Z)CO.,LTD AND SHOULD NOT BE USED WITHOUT WRITTEN PERMISSION

REV	LOCATIONS	DESCRIPTION	DATE	REVISER	APPD

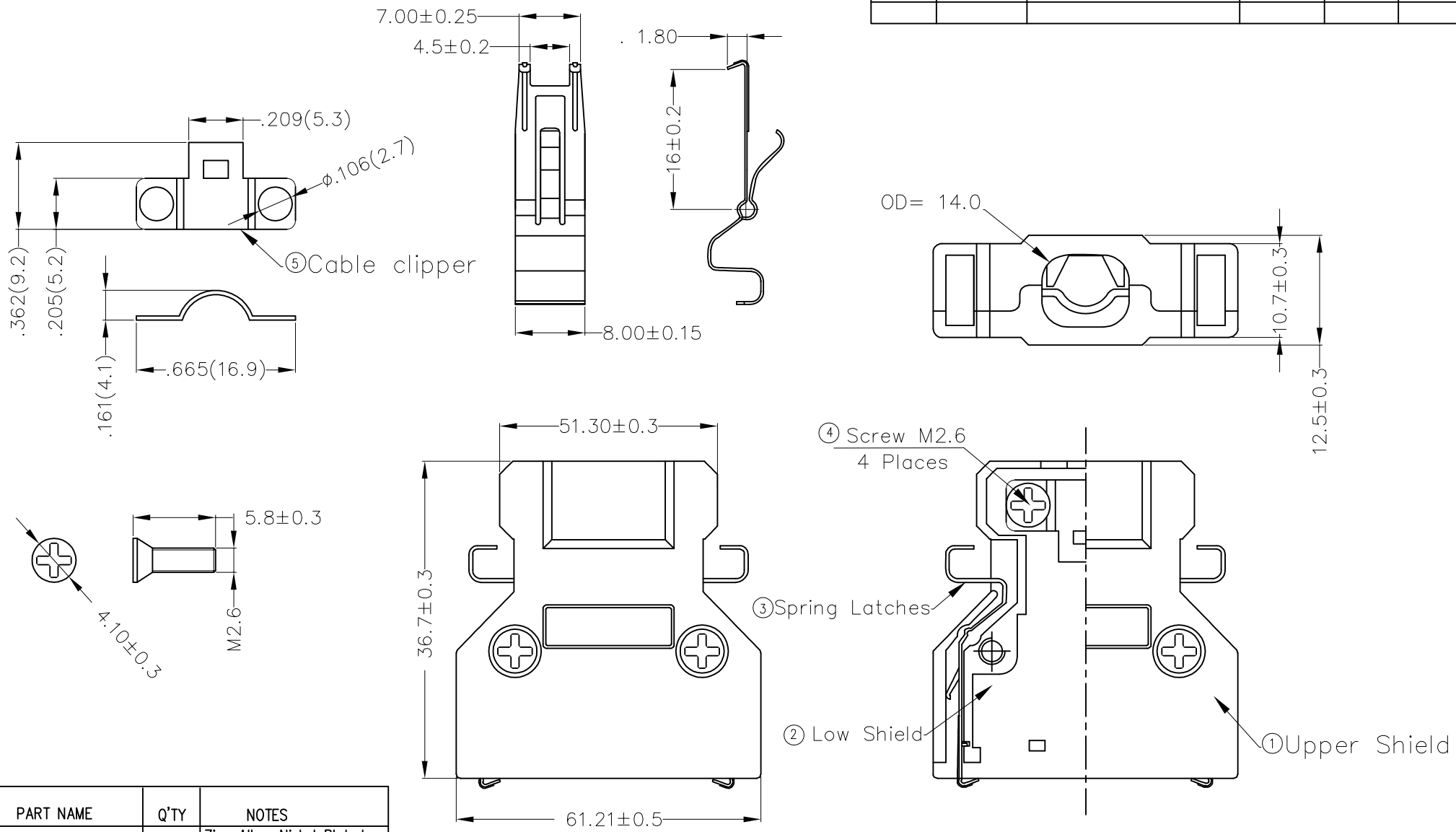

ITEM	PART NAME	Q'TY	NOTES
1	Upper shield	1	Zinc Alloy ,Nickel Plated Over Copper
2	Low shield	1	Zinc Alloy ,Nickel Plated Over Copper
3	Spring latches	2	Stainless Steel
4	Screw M2.6	4	Steel ,Nickel Plated Over Copper
5	Cable clipper	2	Steel ,Nickel Plated Over Copper

THIRD ANGLE PROJECTION

DESIGN UNITS Inch (metric)

SCALE 5:1 SIZE A4

GENERAL TOLERANCES (UNLESS SPECIFIED)

X.±.012(0.30)	X.°±5°
X.X±.008(0.20)	.X°±2°
X.XX±.006(0.15)	.XX°±1°
X.XXX±.004(0.10)	.XXX°±0.5°

APPROVE BY	FRANK	DATE	18/JUN/13
CHECKED BY	CHERRY	DATE	18/JUN/13
DRAWN BY	KATE	DATE	18/JUN/13

PART NO. FCS6808-C100BB

ITEM NO. FCS6808

TXGA Leader Of Industry

TITLE SCSI Connector 68 circuits Cover

REV 0

SHEET NO. 1/1

THIS DRAWING CONTAINS INFORMATION THAT IS PROPRIETARY TO TXGA INDUSTRIAL ELECTRONICS(S.Z)CO.,LTD AND SHOULD NOT BE USED WITHOUT WRITTEN PERMISSION