REV	LOCATIONS	DESCRIPTION	DATE	REVISER	APPD

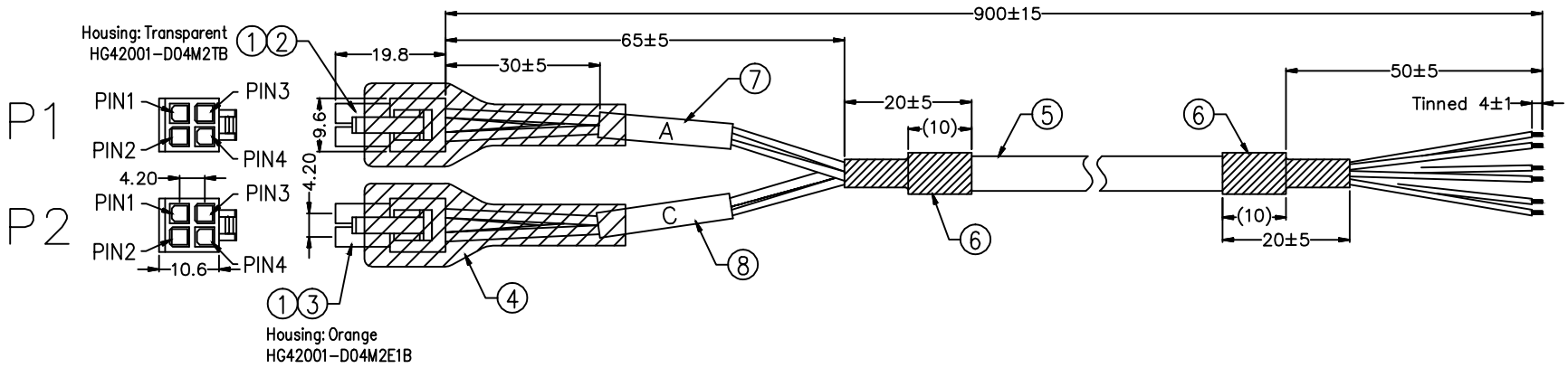

Electrical
1. Withstanding Voltage: DC 300V
2. Conduction impedance: 3Ω (MAX)
3. Insulation Resistance: 10MΩ (MIN)

Packing specification
1. 25pcs/Bundle, 100pcs/Bag

* Note: All Materials Meet The "RoHs" !

NO.	Specification
8	White Label ø3.0*20mm, Printing "C": R-LABEL-284
7	White Label ø3.0*20mm, Printing "A": R-LABEL-283
6	Black Heat Shrink Tube ø6.0mm: R-4HA-11
5	UL2464 26AWG(7/0.16TS) 6C(Red/Orange/Green/Blue/Brown/Black) Jacket Gray (Cool Gray 8U) OD=5.0mm
4	Pitch 4.20mm 4P Sleeve (Gray): R-1HC-04
3	Pitch 4.20mm Housing (Orange): HG42001-D04M2E1B
2	Pitch 4.20mm Housing (Transparent): HG42001-D04M2TB
1	Pitch 4.20mm Terminal (Female): T42001-F2H-1

PIN ASSIGNMENT

P1		P2	
PIN1		PIN1	Blue
PIN2	Green	PIN2	Orange
PIN3		PIN3	Red
PIN4	Black	PIN4	Brown

THIRD ANGLE PROJECTION	GENERAL TOLERANCES (UNLESS SPECIFIED)		APPROVE BY FRANK	DATE 28/DEC/16	PART NO. FCW002-000164 / ITEM NO. FCW002
DESIGN UNITS Metric	X. ±0.30	X.° ±5°	CHECKED BY CHERRY	DATE 28/DEC/16	TITLE MULTI-CONDUCTOR CABLE
	X.X ±0.20	X.X° ±2°			
SCALE 5:1 / SIZE A4	X.XX ±0.15	X.XX° ±1°	DRAWN BY VERNON	DATE 28/DEC/16	REV 0 / SHEET NO. 1/1
	X.XXX ±0.10	X.XXX° ±0.5°			

TXGA Leader Of Industry

THIS DRAWING CONTAINS INFORMATION THAT IS PROPRIETARY TO TXGA INDUSTRIAL ELECTRONICS(S.Z)CO.,LTD AND SHOULD NOT BE USED WITHOUT WRITTEN PERMISSION