REV	LOCATIONS	DESCRIPTION	DATE	REVISER	APPD

SPECIFICATIONS

Materiall and Plating
- Body: Aluminium die-cast,powder-coated(Grey)
- Locking element: Galvanized iron
- Sealing element: NBR

Mechanical
- Temperature Range-Operating: -40℃~+125℃
- Degree of protection: IP65(sealed state)
- Cable entry:Bottom cable entry

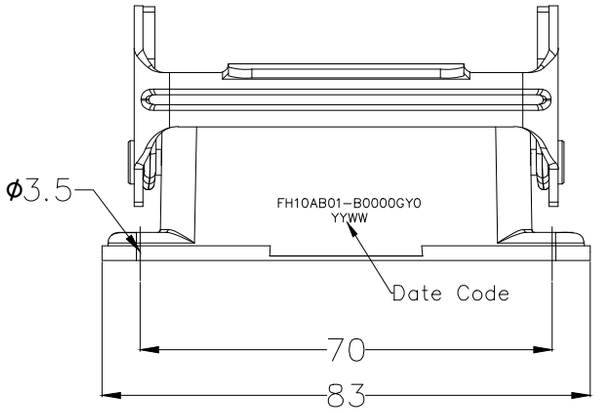

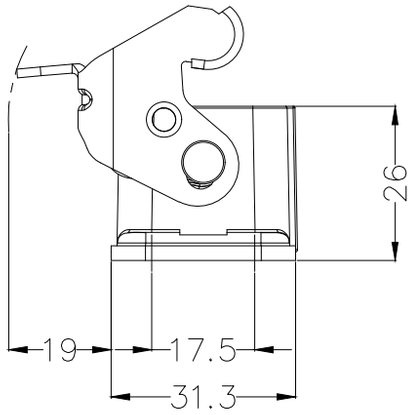

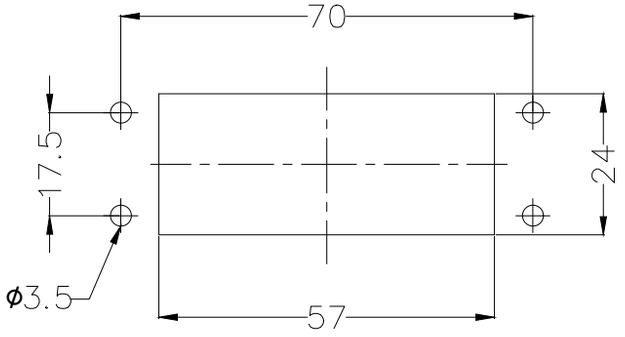

THIRD ANGLE PROJECTION	GENERAL TOLERANCES (UNLESS SPECIFIED)		APPROVE BY LEO	DATE 05/Jul/21	PART NO. FH10AB01-B0000GY0	ITEM NO. FH10AB01	TXGA Building Technology Cornerstone
DESIGN UNITS mm	X. ±0.30	X.° ±5°	CHECKED BY GISELLE	DATE 05/Jul/21	TITLE Heavy-duty connector H10A Base shell		REV 0 / SHEET NO. 1/1
	X.X ±0.20	X.X° ±2°					
	X.XX ±0.15	X.XX° ±1°	DRAWN BY PYD	DATE 05/Jul/21			
SCALE 5:1 / SIZE A4	X.XXX ±0.10	X.XXX° ±0.5°					

THIS DRAWING CONTAINS INFORMATION THAT IS PROPRIETARY TO TXGA INDUSTRIAL ELECTRONICS(S.Z)CO.,LTD AND SHOULD NOT BE USED WITHOUT WRITTEN PERMISSION