REV	LOCATIONS	DESCRIPTION	DATE	REVISER	APPD

SPECIFICATIONS

Electrical
Temperature Range-Operating: -55℃~+125℃
Salt spray: 48h
Material and Plating
Screw: Steel / Nickel Plated

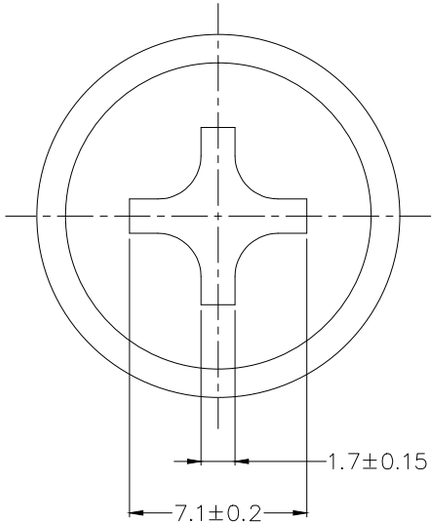

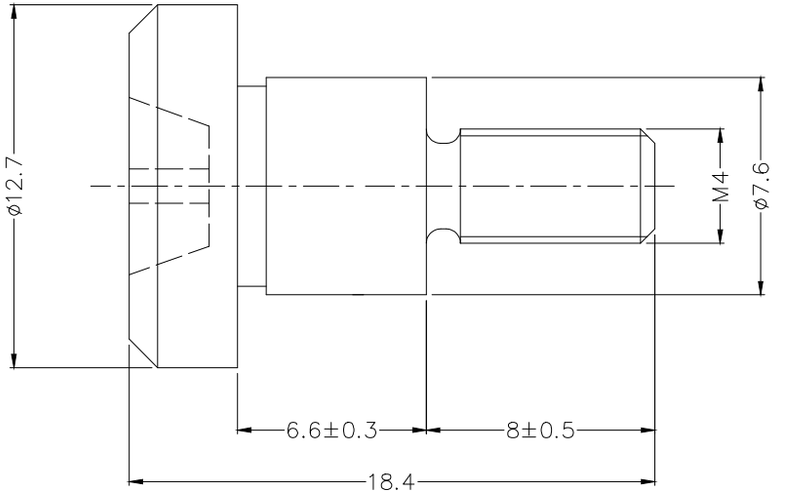

THIRD ANGLE PROJECTION	GENERAL TOLERANCES (UNLESS SPECIFIED)		APPROVE BY LEO	DATE 04/JUN/23	PART NO. FSM040-10100200-02	ITEM NO. FOCLCT	TXGA Building Technology Cornerstone
DESIGN UNITS mm	X. ±0.30	X.° ±5°	CHECKED BY GISELLE	DATE 04/JUN/23	TITLE M4 Cross Screw		REV 0 / SHEET NO. 1/1
SCALE 5:1 / SIZE A4	X.X ±0.20	X.X° ±2°					
	X.XX ±0.15	X.XX° ±1°	DRAWN BY PYD	DATE 04/JUN/23			
	X.XXX ±0.10	X.XXX° ±0.5°					

THIS DRAWING CONTAINS INFORMATION THAT IS PROPRIETARY TO TXGA INDUSTRIAL ELECTRONICS(S.Z)CO.,LTD AND SHOULD NOT BE USED WITHOUT WRITTEN PERMISSION