REV	LOCATIONS	DESCRIPTION	DATE	REVISER	APPD
0		New Relase	30/MAY		FRANK

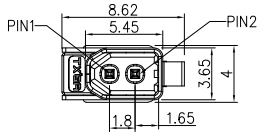

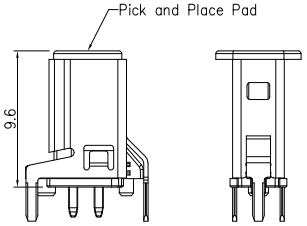

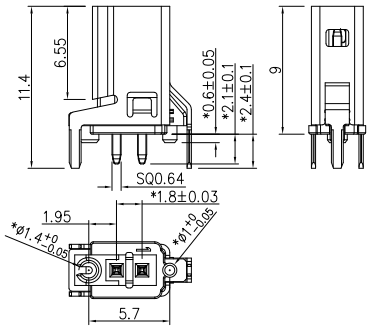

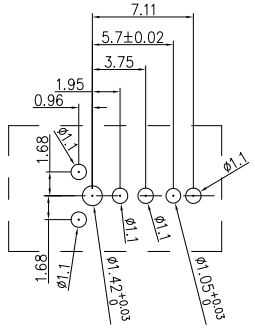

PCB Layout【2:1】

Material

connector parts	material	Plating
inner contact	brass	Gold
outer contact	brass	Sn
housing	LCP	

Flame proofing

Component	category
overmold	material conforms to UL94V-0
housing	material conforms to UL94V-0

International protection code IP20

RoHS compliant

Standards

According the standard IEC 63171-2

Power over Data Line (PoDL) acc. IEEE 802.3bu

PCB Layout MB_952

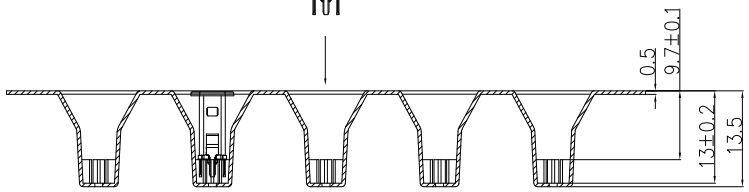

min. loading belt empty
400mm(belt end)

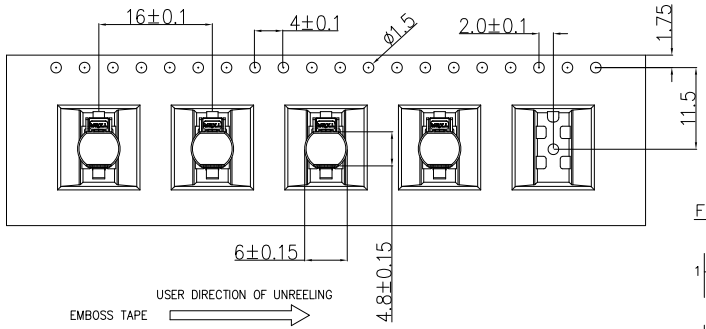

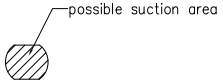

Pin assignment

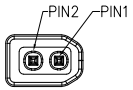

Pair	Contact	Data
1	1	Rx/Tx+
	2	Rx/Tx-

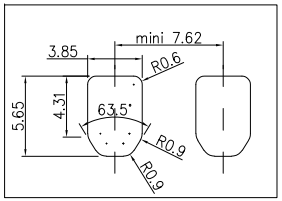

Panel cutout

contact dimensions	effective length
contact 1	11.3
contact 2	15.3

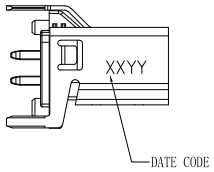

Ordering Information

FSPE (1) – T1 (2) S (3) ST (4) 1 (5) XX (6) – 000 (7)

1 Series Name: FSPE – 2 Type: T1 – 3 Type: S-Socket – 4 Entry Angle: ST-Straight

5 Contact: 1-EP AU – 6 thickness of Plating: 15-15u" 20-20u" – 7 Serial Number: 000

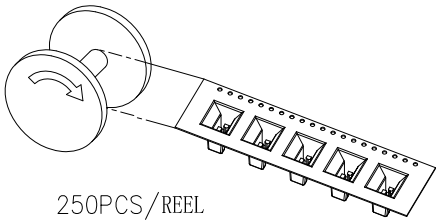

250PCS/REEL

THIRD ANGLE PROJECTION	GENERAL TOLERANCES (UNLESS SPECIFIED)		DATE FRANK	APPROVE BY 30/MAY/24	PART NO. FSPE-T1SST1XX-000 / ITEM NO. FSPE
DESIGN UNITS Metric	X.±.012(0.30)	X.°±5°	CHECKED BY CHERRY	DATE 30/MAY/24	TITLE SPE T1 Socket Straight THR
SCALE 2:1 / SIZE A4	X.X±.008(0.20)	.X°±2°			REV 0 / SHEET NO. 1/1
	X.XX±.006(0.15)	.XX°±1°	DRAWN BY DANIEL	DATE 30/MAY/24	
	X.XXX±.004(0.10)	.XXX°±0.5°			

TXGA Building Technology Cornerstone

THIS DRAWING CONTAINS INFORMATION THAT IS PROPRIETARY TO TXGA INDUSTRIAL ELECTRONICS(S.Z)CO.,LTD AND SHOULD NOT BE USED WITHOUT WRITTEN PERMISSION