REV	LOCATIONS	DESCRIPTION	DATE	REVISER	APPD
1	1	Structure optimization	18/JUL/18	KATE	FRANK

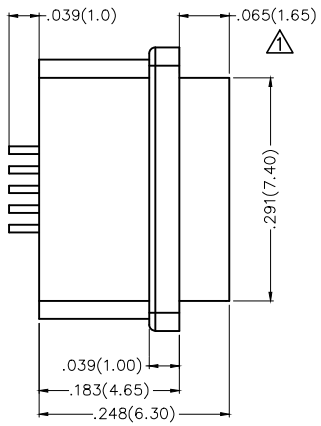

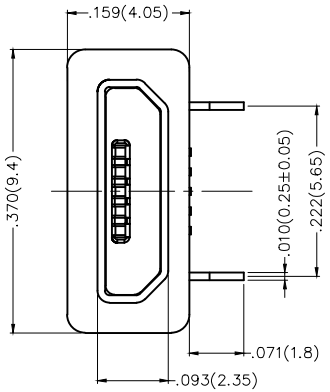

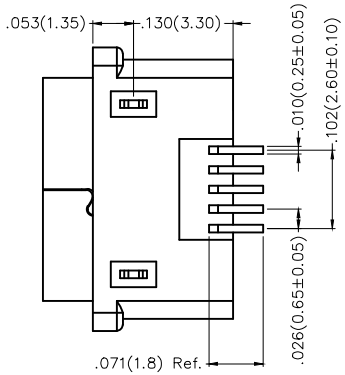

SPECIFICATIONS

Electrical
- Current Rating: 1.0A AC(rms)/DC
- Contact Resistanc: 50 mΩ Max
- Insulation Resistance: 100 MΩ Min
- Withstanding Voltage: 100V AC r.m.s
- Operating Temperature: −30°C~+80°C

Mechanical
- Total Mating Force: 3.57 Kgf Max
- Total Un−mating Force: 1.0 Kgf Min.

Material and plating
- Housing: Thermoplastic (UL 94V−0) Black
- Contact: Copper Alloy/ Gold plated
- Shell: Copper Alloy/ Nickel plated

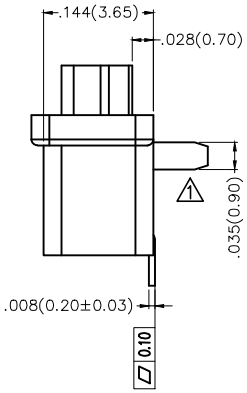

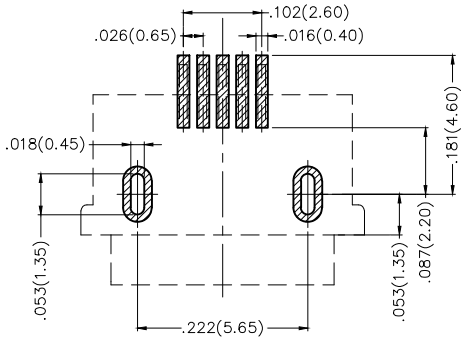

Recommended P.C.Board Layout

General Tolerances: ±0.05mm

THIRD ANGLE PROJECTION	GENERAL TOLERANCES (UNLESS SPECIFIED)		APPROVE BY FRANK	DATE 27/JUL/17	PART NO. FUS452−FSBK6M	ITEM NO. FUS452	TXGA Leader Of Industry
DESIGN UNITS Inch (metric)	X.±.012(0.30)	X.°±5°	CHECKED BY CHERRY	DATE 27/JUL/17	TITLE Micro USB 5Circuits 90°Angle Female(SMT)		REV 1 / SHEET NO. 1/1
	X.X±.008(0.20)	.X°±2°					
SCALE 5:1 / SIZE A4	X.XX±.006(0.15)	.XX°±1°	DRAWN BY LXF	DATE 27/JUL/17	THIS DRAWING CONTAINS INFORMATION THAT IS PROPRIETARY TO TXGA INDUSTRIAL ELECTRONICS(S.Z)CO.,LTD AND SHOULD NOT BE USED WITHOUT WRITTEN PERMISSION		
	X.XXX±.004(0.10)	.XXX°±0.5°					