REV	LOCATIONS	DESCRIPTION	DATE	REVISER	APPD

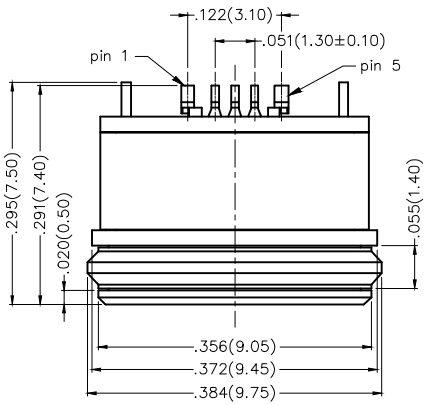

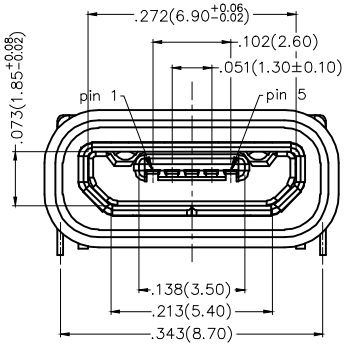

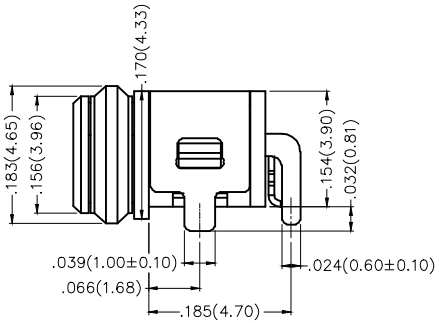

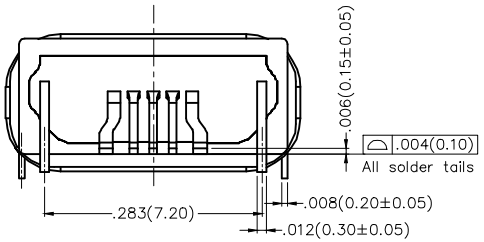

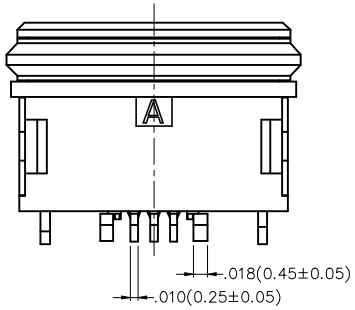

SPECIFICATIONS

Electrical
- Current Rating: 0.5A(pin2,3,4), 3.0A(pin1,5)
- Voltage Rating: 30V AC(rms)/DC
- Contact Resistance: 30 mΩ Max(initial)
- Withstanding Voltage: 500V AC r.m.s
- Insulation Resistance: 1000 MΩ Min
- Temperature Range−Operating: −40°C~+80°C

Mechanical
- Insertion Force: 3.5kgf Max
- Withdrawal Force: 0.8kgf Min(initial)
- Durability: 10,000 cycles Min.

Material And Plating
- Housing: Thermoplastic (UL94V−0), Black
- Terminal: Copper Alloy/ Gold plated
- Shell: Stainless steel/ Nickel plated
- Outer shell: Thermoplastic (UL 94V−0) Black
- U−shaped frame: Stainless steel/ Nickel plated
- Waterproof ring: Rubber, White

Ingress protection rating: IPX7

Pinassignment:

Pins	1	2	3	4	5
Signal name	VBUS	D−	D+	ID	GND

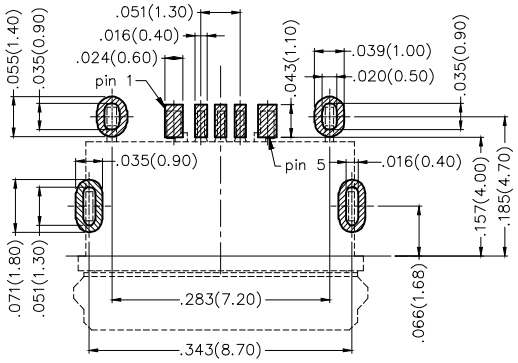

Recommended P.C.Board Layout

General Tolerances: ±0.05mm

THIRD ANGLE PROJECTION	GENERAL TOLERANCES (UNLESS SPECIFIED)		APPROVE BY FRANK	DATE 13/FEB/18	PART NO. FUS465−FSBK6M / ITEM NO. FUS465
DESIGN UNITS Inch (metric)	X.±.012(0.30)	X.°±5°	CHECKED BY CHERRY	DATE 13/FEB/18	TITLE Micro USB 5Circuits 90°Angle Female(SMT)
	X.X±.008(0.20)	.X°±2°			
	X.XX±.006(0.15)	.XX°±1°	DRAWN BY KATE	DATE 13/FEB/18	REV 0 / SHEET NO. 1/1
SCALE 5:1 / SIZE A4	X.XXX±.004(0.10)	.XXX°±0.5°			

TXGA Leader Of Industry

THIS DRAWING CONTAINS INFORMATION THAT IS PROPRIETARY TO TXGA INDUSTRIAL ELECTRONICS(S.Z)CO.,LTD AND SHOULD NOT BE USED WITHOUT WRITTEN PERMISSION