REV	LOCATIONS	DESCRIPTION	DATE	REVISER	APPD

WIRING CHART		
P1	COLOR	P2 Label
1	White	1
2	White	2
3	White	3
4	White	4
5	White	5
•	•	•
•	•	•
•	•	•
34	White	34
35	White	35
36	White	36
37	White	37

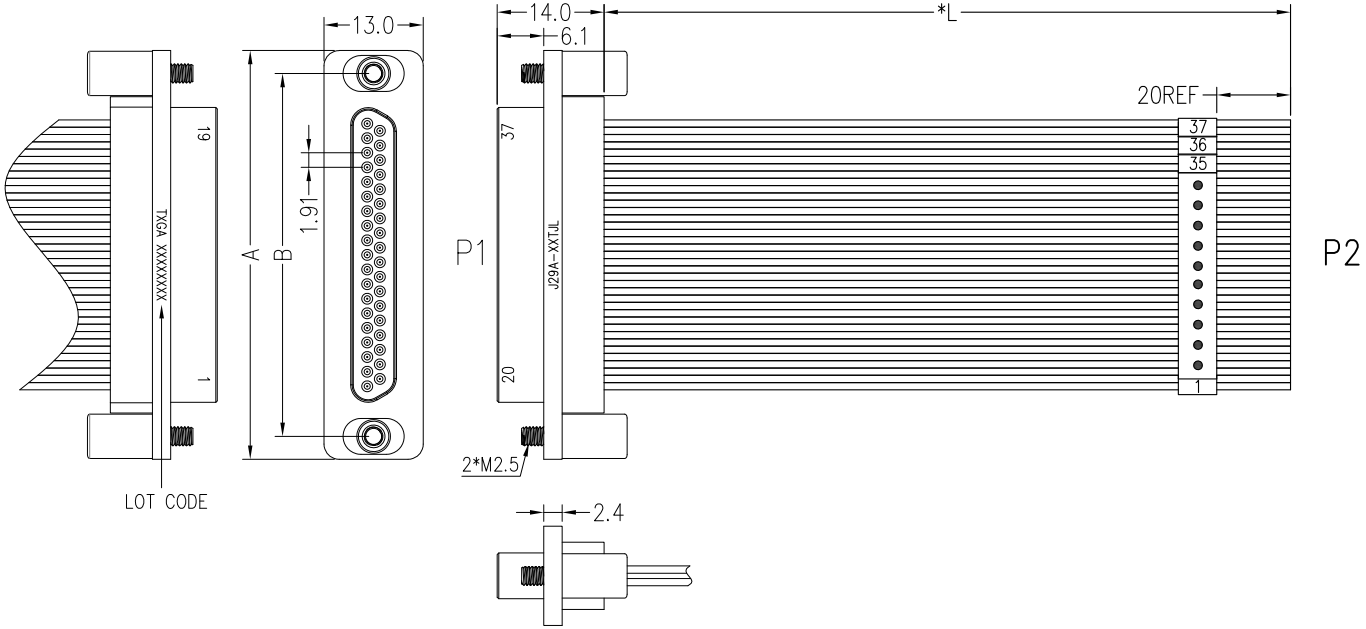

Specfications

Electrical

Current Rating: 5.0A AC(rms)/DC

Voltage Rating: 500V AC(rms)/DC

Contact Resistance: 10 mΩ Max

Insulation Resistance: 5000 MΩ MIN

Withstanding Voltage: 1500V AC r.m.s

Temperature Range-Operating: -55℃~+125℃

Mechanical

Durability: 500 Cycles

Vibration: Frequency 10~2000Hz, Acceleration 196m/s^2,

Shock: Peak Acceleration 1200m/s^2.

Material and Plating

Shell: Aluminum alloy /plated Nickel

Terminal: Copper alloy /plated Gold

Wire: AFR250 0.2mm^2 White

FWMD0-S XXX XXXX-019

1 2 3 4 5

1	2	3	4	5
Category	Type	Circuits	Length	Standard Parts
FWMD0-Micro-D Connector	S-One-way plug cable	009-9P 015-15P ...	XXXX-See Table 2	019

Table 1:

Circuits (n)	Part No.	Dimensions(mm)	
		A	B
9	FWMD0-S009XXXX-019	26.1	20.1
15	FWMD0-S015XXXX-019	31.6	25.6
21	FWMD0-S021XXXX-019	37.3	31.3
25	FWMD0-S025XXXX-019	42.0	36.0
31	FWMD0-S031XXXX-019	47.8	41.8
37	FWMD0-S037XXXX-019	53.5	47.5

Table 2:

LENGTH EXPLANATION (mm)										
Wire length (xxxx)	0100	0150	0200	0300	0500	0800	1000	1200	.....	1500
	100mm	150mm	200mm	300mm	500mm	800mm	1000mm	1200mm	.....	1500mm
Tolerance	$0\sim200^{+20}_{-5}$			$201\sim500^{+30}_{-10}$		$501\sim1000^{+60}_{-10}$		$1001\sim1500^{+80}_{-10}$		

THIRD ANGLE PROJECTION	GENERAL TOLERANCES (UNLESS SPECIFIED)		APPROVE BY LEO	DATE 28/MAY/25	PART NO. FWMD0-SXXXXXXX-019
DESIGN UNITS mm	X. ±0.30	X.° ±5°	CHECKED BY GISELLE	DATE 28/MAY/25	ITEM NO. FWMD0
	X.X ±0.20	X.X° ±2°			TITLE SINGLE CONDUCTOR CABLE
SCALE NTS	X.XX ±0.15	X.XX° ±1°	DRAWN BY HUANG	DATE 28/MAY/25	REV 0
SIZE A4	X.XXX ±0.10	X.XXX° ±0.5°			SHEET NO. 1/1

TXGA Building Technology Cornerstone

THIS DRAWING CONTAINS INFORMATION THAT IS PROPRIETARY TO TXGA INDUSTRIAL ELECTRONICS(S.Z)CO.,LTD AND SHOULD NOT BE USED WITHOUT WRITTEN PERMISSION

REV	LOCATIONS	DESCRIPTION	DATE	REVISER	APPD

WIRING CHART		
P1	COLOR	P2 Label
1	White	1
2	White	2
3	White	3
4	White	4
5	White	5
•	•	•
•	•	•
•	•	•
63	White	63
64	White	64
65	White	65
66	White	66

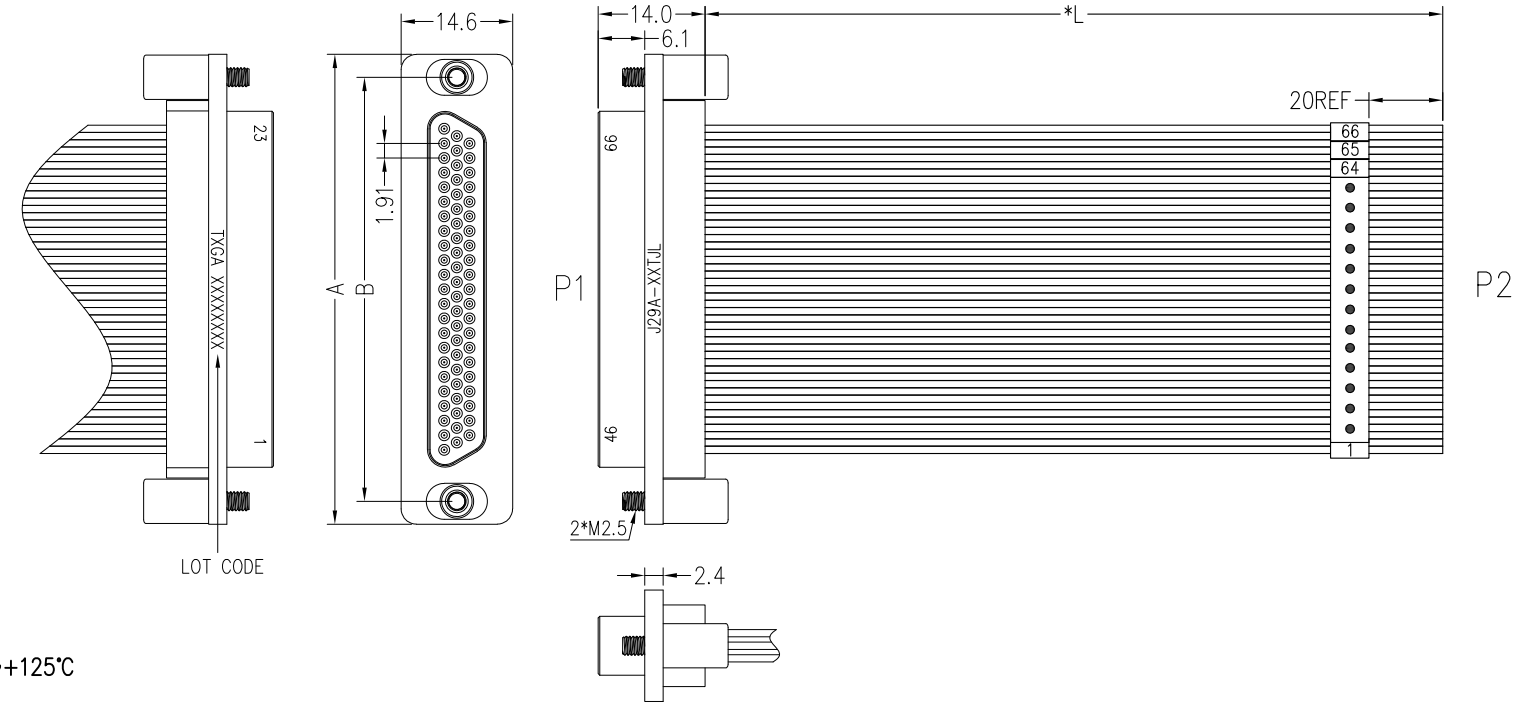

Specfications

Electrical

Current Rating: 5.0A AC(rms)/DC

Voltage Rating: 500V AC(rms)/DC

Contact Resistance: 10 mΩ Max

Insulation Resistance: 5000 MΩ MIN

Withstanding Voltage: 1500V AC r.m.s

Temperature Range–Operating: –55℃~+125℃

Mechanical

Durability: 500 Cycles

Vibration: Frequency 10~2000Hz, Acceleration 196m/s²,

Shock: Peak Acceleration 1200m/s².

Material and Plating

Shell: Aluminum alloy /plated Nickel

Terminal: Copper alloy /plated Gold

Wire: AFR250 0.2mm² White

FWMD0–S XXX XXXX–019
1 2 3 4 5

1 Category	2 Type	3 Circuits	4 Length	5 Standard Parts
FWMD0–Micro–D Connector	S–One–way plug cable	051–51P 066–66P …	XXXX–See Table 2	019

Table 1:

Circuits (n)	Part No.	Dimensions(mm)	
		A	B
51	FWMD0–S051XXXX–019	52.0	46.0
66	FWMD0–S066XXXX–019	61.5	55.5

Table 2:

LENGTH EXPLANATION (mm)										
Wire length (xxxx)	0100	0150	0200	0300	0500	0800	1000	1200	.....	1500
	100mm	150mm	200mm	300mm	500mm	800mm	1000mm	1200mm	.....	1500mm
Tolerance	$0\sim200^{+20}_{-5}$			$201\sim500^{+30}_{-10}$		$501\sim1000^{+60}_{-10}$		$1001\sim1500^{+80}_{-10}$		

THIRD ANGLE PROJECTION	GENERAL TOLERANCES (UNLESS SPECIFIED)	APPROVE BY LEO	DATE 19/AUG/25	PART NO. FWMD0–SXXXXXXX–019	ITEM NO. FWMD0
DESIGN UNITS METRIC(mm)	X. ±0.30 X.° ±5° X.X ±0.20 X.X° ±2° X.XX ±0.15 X.XX° ±1° X.XXX ±0.10 X.XXX° ±0.5°	CHECKED BY GISELLE	DATE 19/AUG/25	TITLE SINGLE CONDUCTOR CABLE	TXGA Building Technology Cornerstone
SCALE NTS	SIZE A4	DRAWN BY HUANG	DATE 19/AUG/25		REV 0 SHEET NO. 1/1

THIS DRAWING CONTAINS INFORMATION THAT IS PROPRIETARY TO TXGA INDUSTRIAL ELECTRONICS(S.Z)CO.,LTD AND SHOULD NOT BE USED WITHOUT WRITTEN PERMISSION